LT SERIES

Hi-Ranger Telescopic Aerial Device

AERIAL DEVICES

Terex® Hi-Ranger Aerial Devices are known throughout the industry. They come with a long history featuring quality and innovative design .

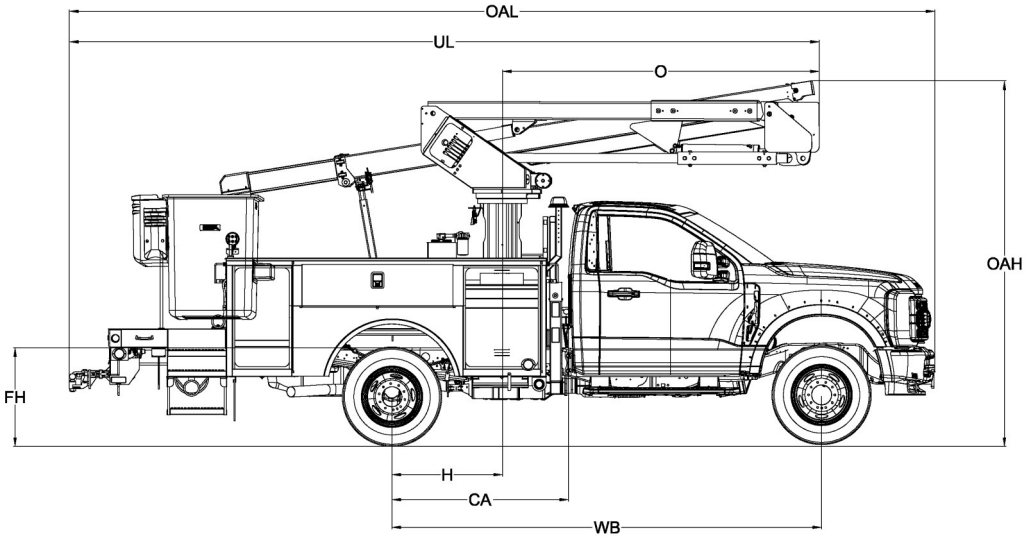

MEASUREMENTS	LT40
Typical Frame Height (FH)	32 in. *(81.3 cm)*
Typical Cab Height (CH)	78 in. *(198.1 cm)*
Offset (O)	108 in. *(274.0 cm)*
Overall Height (OAH)	9' 9" *(3.0 m)*
Overall Length (OAL)	21' 10" *(6.7 m)*
Unit Length (UL)	19' 7" *(6.0 m)*
Center of Rotation (H)	46 in. *(116.8 cm)*
Cab to Axle (CA)	60 in. *(152.4 cm)*
Wheel Base (WB)	141 in. *(358.0 cm)*
Front Axle (FA)	7,000 lb. *(3,175 kg)*
Rear Axle (RA)	11,000 lb. *((4,990 kg)*
Gross Vehicle Weight Rating (GVWR)	15,000 lb. *(6,803 kg)*
Recommended Weight for Stability (With Torsion Bars)	13,000 lb. *(5,897 kg)*
Frame Section Modulus	9.75 in^3
Frame Yield Strength	36,000 psi
Frame RBM	350,000 in-lbs

500 Oakwood Road
PO BOX 1150
Watertown, SD 57201-6150
USA

Phone: (605) 882-4000
Fax: (605) 882-1842
www.terexutilities.com
Email: utilities.info@terex.com

Distributed By:

STANDARD EQUIPMENT

- End Mounted 24 x 30 x 42” One Person Platform
- Platform Capacity, *See Chart Below.*
- 4-Function Single Stick
- Safety Harness With Attached Lanyard
- Continuous Unrestricted Worm Gear Rotation
- Category “C” Rating Per ANSI A92.2
- Rectangular, Bi-Axial Epoxy Resin, Filament Wound Fiberglass Booms
- Full Pressure Controls on Side of Platform
- Individual Lever Lower Controls
- Platform Tilt Control At Upper and Lower Controls
- Hydraulic Tool Outlets
- Engine Stop / Start
- Hydraulic Platform Leveling
- Steel Main Upper Boom
- Fiberglass Second Section Upper Boom
- Fiberglass Lift Boom Insert
- Full Pressure, Open-Center Hydraulic System
- 8 Gallon Pedetal Mounted External Tank
- Padded Boom Rest
- Hydraulic Platform Rotator
- Truck Level Indicator
- Finish Painted

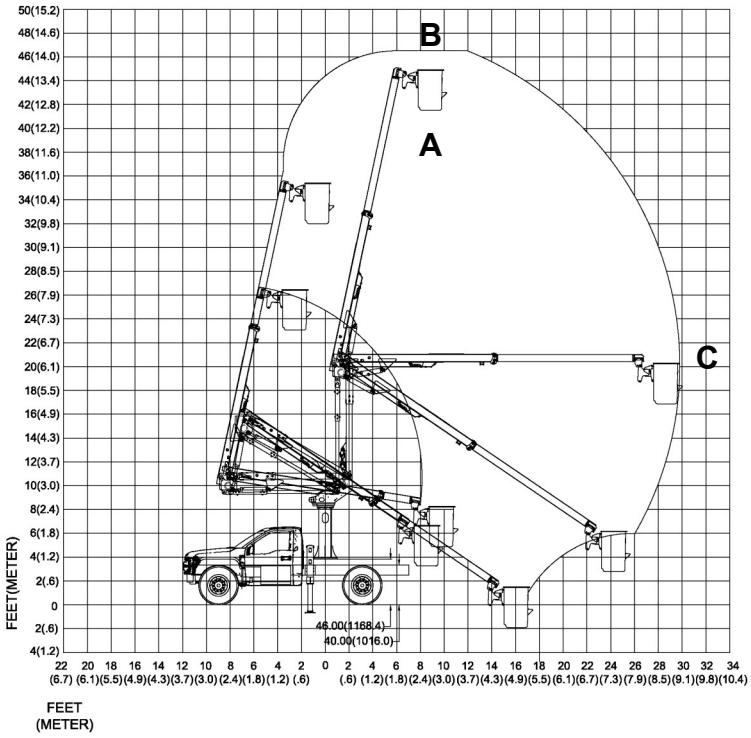

CAPACITIES AND DIMENSIONAL DATA (Based on a 40 Inch Frame Height)

	Bottom of Platform Height (A)	Working Height (B)	Horizontal Reach (C)	Boom Travel		Platform Capacity
				Lower Boom	Upper Boom	
LT40 **without outriggers**	40.6 ft (12.4 m)	45.6 ft (13.8 m)	**26.6 ft (8.1 m)**	0 to 72°	-34 to 78°	**400 lbs. (181.0kg)**
LT40 **without outriggers**	40.6ft (12.4 m)	45.6 ft (13.8 m)	**27.9 ft (8.5 m)**	0 to 81°	-34 to 78°	**350 lbs. (159.0kg)**
LT40 **with outriggers**	40.6 ft (12.4 m)	45.6 ft (13.8 m)	**29.4 ft (9.0 m)**	0 to 90°	-34 to 78°	**400 lbs. (181.0kg)**

OPTIONAL EQUIPMENT

- Various Platform Covers
- Liners With or Without Steps
- Auxiliary Power
- Auxiliary Let Down System
- 20 Gallon Remote Oil Reservoir
- Boom Overstow Protection
- Boom Stow Interlock
- Outrigger Sag Light
- Various Types of Outriggers
  - Moving Outrigger Alarm
  - Boom Interlock
- Truck Grounding Cable & Clamp
- Optional Electric PTO
- Automatic Boom Latch

Effective Date: September 2018. Product specifications and prices are subject to change without notice or obligation. The photographs and/or drawings in this document are for illustrative purposes only. Refer to the appropriate Operator’s Manual for instructions on the proper use of this equipment. Failure to follow the appropriate Operator’s Manual when using our equipment or to otherwise act irresponsibly may result in serious injury or death. The only warranty applicable to our equipment is the standard written warranty applicable to the particular product and sale and Terex makes no other warranty, express or implied. Products and services listed may be trademarks, service marks or trade-names of Terex Corporation and/or its subsidiaries in the USA and other countries. All rights are reserved. Terex® is a registered trademark of Terex Corporation in the USA and many other countries. Copyright 2026 Terex Corporation.

11022 03/26 PRINTED IN THE USA