TEREX

TECH TIPS

AERIAL LOAD CHARTS P/N 493961

NO. 19

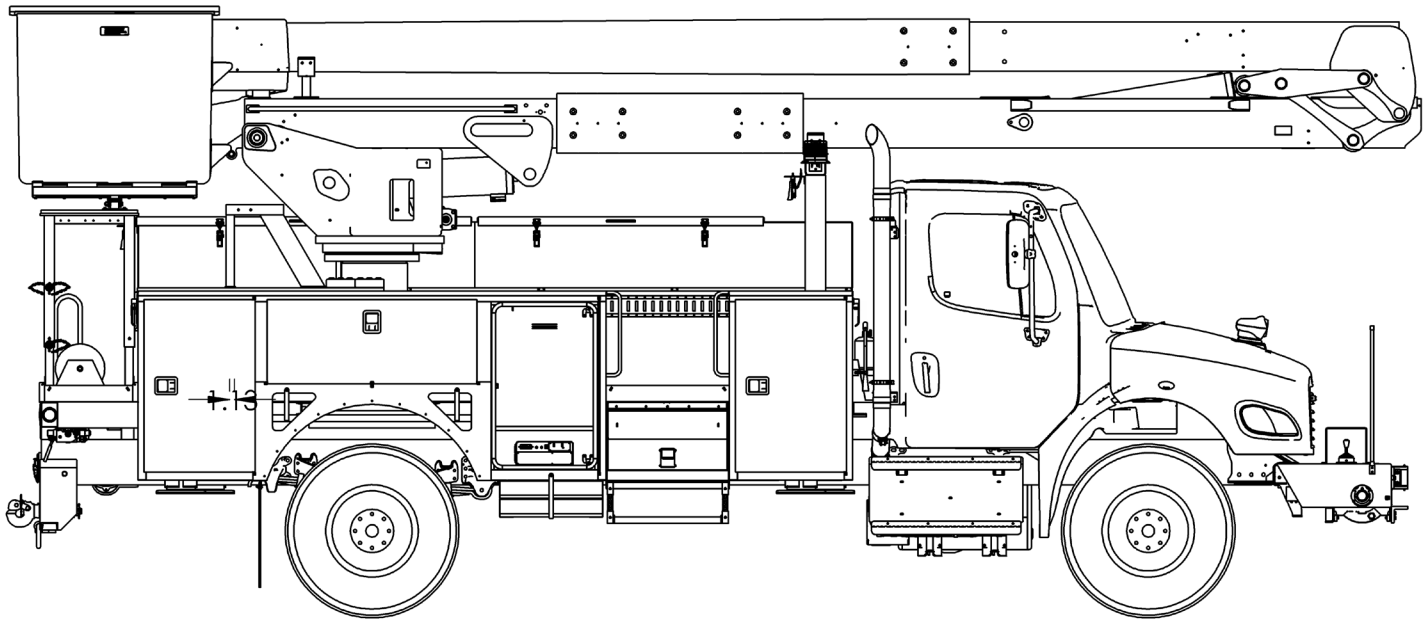

GENERAL KNOWLEDGE
AERIAL LOAD CHARTS

MODEL(S):
AERIAL UNITS USING LOAD CHART 493961

TOOLS NEEDED:
NONE

TEREX UTILITIES TECHNICAL SUPPORT TEAM
PHONE: 1-844-TEREX4U (1-844-837-3948) | EMAIL: UTILITIES.SERVICE@TEREX.COM

DANGER

Failure to obey the instructions and safety rules in the appropriate Operator's Manual and Service Manual for your machine will result in death or serious injury.

Many of the hazards identified in the Operator's Manual are also safety hazards when maintenance and repair procedures are performed.

DO NOT PERFORM MAINTENANCE UNLESS:

√ You are trained and qualified to perform maintenance on this machine.

√ You read, understand and obey:

- manufacturer's instructions and safety rules
- employer's safety rules and worksite regulations
- applicable governmental regulations

√ You have the appropriate tools, lifting equipment and a suitable workshop.

The information contained in this Tech Tip is a supplement to the Service Manual. Consult the appropriate Service Manual of your machine for safety rules and hazards.

TEREX®

TECH TIP 19 | RELEASED 09.03.2025 | VERSION 1.1

©TEREX UTILITIES. ALL RIGHTS RESERVED

CONTENTS

TECH TIP#19

4 | *Transformer weight*
INTRODUCTION
STEP 1

5 | *Determine weight within platform*
STEP 2

6 | *Load radius*
STEP 3

7 | *Upper boom angle*
STEP 4

8 | *Unused platform capacity*
STEP 5

INTRODUCTION

An operator will move a transformer from the ground and position it on a pole. Using the information in the following steps, determine if the lift plan can be achieved while remaining within the limits of the load chart.

This tech-tip demonstrates how to use a load chart. Always use the unit specific load chart to determine capacities and to plan the path of the load.

STEP 1

The transformer has a known weight of 320 lbs. Performing a dry run, the operator determined the boom angles required to move and place the transformer.

TL41 JIB LIFTING CAPACITIES

WINCH CENTER TO LOAD LINE

UB ANGLE	0' TO 2'	2' TO 3'	3' TO 4'	4' TO 5'	OVER 5'
75°	1400	750	650	300	200
65°					
60°	1250				
45°	1000				
30°	625	625	600		
15°	400	375	350		
0°	300	300	300		
-15°	400	375	450		
-30°	625	625	650		
-40°	900	750			
MAX	1500	750	650	400	400

EQUIPPED AS FOLLOWS:

- SIDE MOUNT BOOM TIP WITH PLATFORM LIFT
- 400 LB. PLATFORM CAPACITY.
- CAPACITIES ARE IN LB.
- 90% OF THE UNUSED BASKET CAPACITY CAN BE ADDED TO THE JIB, UP TO A LOAD RADIUS OF 3'. NOT TO EXCEED VALUES SHOWN IN THE "MAX" ROW

493961A

Load Radius	2 feet	**Liner**	50 lbs.
Operator	200 lbs.	**Tools**	50 lbs.
Transformer	320 lbs.	**Upper Boom Angle**	0° to 65°

STEP 2

Determine if the load in the platform is within capacity.

Using the load chart, the platform capacity is 400 lbs.

The weight of the Operator + Liner + Tools = 200 + 50 + 50 = 300 lbs.

The total weight is less than the platform capacity.

Load Radius	2 feet	**Liner**	50 lbs.
Operator	200 lbs.	**Tools**	50 lbs.
Transformer	320 lbs.	**Upper Boom Angle**	0° to 65°

TL41 JIB LIFTING CAPACITIES

WINCH CENTER TO LOAD LINE

UB ANGLE	0' TO 2'	2' TO 3'	3' TO 4'	4' TO 5'	OVER 5'
75°	1400	750	650	300	200
65°					
60°	1250				
45°	1000				
30°	625	625	600		
15°	400	375	350		
0°	300	300	300		
-15°	400	375	450		
-30°	625	625	650		
-40°	900	750			
MAX	1500	750	650	400	400

EQUIPPED AS FOLLOWS:

- SIDE MOUNT BOOM TIP WITH PLATFORM LIFT
- 400 LB. PLATFORM CAPACITY.
- CAPACITIES ARE IN LB.
- 90% OF THE UNUSED BASKET CAPACITY CAN BE ADDED TO THE JIB, UP TO A LOAD RADIUS OF 3'. NOT TO EXCEED VALUES SHOWN IN THE "MAX" ROW

493961A

STEP 3

The load radius (winch center to load line) is 2 feet. Based on this load radius, column 2 will be used to determine capacities.

Load Radius	2 feet	Transformer	320 lbs.
Upper Boom Angle	0° to 65°		

TL41 JIB LIFTING CAPACITIES

WINCH CENTER TO LOAD LINE

UB ANGLE	0' TO 2'	2' TO 3'	3' TO 4'	4' TO 5'	OVER 5'
75°	1400	750	650	300	200
65°					
60°	1250				
45°	1000				
30°	625	625	600		
15°	400	375	350		
0°	300	300	300		
-15°	400	375	450		
-30°	625	625	650		
-40°	900	750			
MAX	1500	750	650	400	400

EQUIPPED AS FOLLOWS:

- SIDE MOUNT BOOM TIP WITH PLATFORM LIFT
- 400 LB. PLATFORM CAPACITY.
- CAPACITIES ARE IN LB.
- 90% OF THE UNUSED BASKET CAPACITY CAN BE ADDED TO THE JIB, UP TO A LOAD RADIUS OF 3'. NOT TO EXCEED VALUES SHOWN IN THE "MAX" ROW

493961A

STEP 4

The upper boom angle is listed in the table range from 0° to 65°. The max load that can be lifted in this range is 300 lbs. The 320 lb. transformer exceeds the lifting capacity listed on the load chart.

Upper Boom Angle	0° to 65°	Transformer	320 lbs.

TL41 JIB LIFTING CAPACITIES

WINCH CENTER TO LOAD LINE

UB ANGLE	0' TO 2'	2' TO 3'	3' TO 4'	4' TO 5'	OVER 5'
75°	1400		650	300	200
65°		750			
60°	1250				
45°	1000				
30°	625	625	600		
15°	400	375	350		
0°	300	300	300		
-15°	400	375	450		
-30°	625	625	650		
-40°	900	750			
MAX	1500	750	650	400	400

EQUIPPED AS FOLLOWS:

- SIDE MOUNT BOOM TIP WITH PLATFORM LIFT
- 400 LB. PLATFORM CAPACITY.
- CAPACITIES ARE IN LB.
- 90% OF THE UNUSED BASKET CAPACITY CAN BE ADDED TO THE JIB, UP TO A LOAD RADIUS OF 3'. NOT TO EXCEED VALUES SHOWN IN THE "MAX" ROW

493961A

STEP 5

90% of the unused platform capacity can also be added to the jib up to a load radius of 3' provided the total is within the MAX capacity shown on the load chart.

(Platform capacity - total weight in the platform) x 90%
(400 - 300) x 90%
100 x .9 = 90 lbs.

In the load chart below, the values have been adjusted to reflect the updated capacities with the additional 90 lbs. of unused platform capacity. Note at 45° and above the capacity doesn't change, it's already at the listed MAX on the load chart for the load radius. Using the unused platform capacity allows the transformer to be lifted.

TL41 JIB LIFTING CAPACITIES

WINCH CENTER TO LOAD LINE

UB ANGLE	0' TO 2'	2' TO 3'	3' TO 4'	4' TO 5'	OVER 5'
75°	1400	750	650	300	200
65°					
60°	1250				
45°	1000				
30°	625	~~625~~ 715	600		
15°	400	~~375~~ 465	350		
0°	300	~~300~~ 390	300		
-15°	400	375	450		
-30°	625	625	650		
-40°	900	750			
MAX	1500	750	650	400	400

EQUIPPED AS FOLLOWS:

- SIDE MOUNT BOOM TIP WITH PLATFORM LIFT
- 400 LB. PLATFORM CAPACITY.
- CAPACITIES ARE IN LB.
- 90% OF THE UNUSED BASKET CAPACITY CAN BE ADDED TO THE JIB, UP TO A LOAD RADIUS OF 3'. NOT TO EXCEED VALUES SHOWN IN THE "MAX" ROW

493961A

TEREX®

FOR FURTHER ASSISTANCE,
CONTACT THE TEREX UTILITIES TECHNICAL SUPPORT TEAM
PHONE: 1-844-TEREX4U (1-844-837-3948) | EMAIL: UTILITIES.SERVICE@TEREX.COM