FRANNA
A TEREX BRAND

TECHNICAL DATASHEET

SAFETY RADAR EQUIPPED
PATENT PENDING



MAC30

PICK AND CARRY CRANE

MAXIMUM CAPACITY	MAXIMUM BOOM LENGTH	MAXIMUM HOOK HEIGHT
30t	18.4m	18m

terex.com/franna

OVERVIEW

The MAC30 is a mobile articulated crane with a maximum lifting capacity of 30 tonne (33 USt). The MAC30 offers maximum safety, increased operator comfort, excellent roadability, intuitive operation and unmatched versatility. Over the years it's design has been tried, tested and proven in a range of difficult lifting applications and is still a customer favourite today.

A superlift (SL) upgrade is also available on the MAC30 as an additional option. The SL kit works in tandem with the existing MAC30 counterweight, adding a low slung additional counterweight piece to the rear of the machine, increasing the rated capacity of the machine.



KEY FEATURES AND BENEFITS:

- 30 tonne at 1.4m radius
- 14.7 tonne at 3.0m radius
- 1.8 tonne at 15.7m radius
- 18m hook height
- Single line pull 4.3 tonne
- Increased rated capacity of up to 30% with SL option
- Dynamic LMI (patent protected)*
- Safety Radar (patent pending)
- Designed to AS1418.5-2013
- High strength and lightweight boom with easy maintenance
- Unique boom head design allows for maximum clearance
- Easy access to all key maintenance points
- ISO 3471 ROPS compliant pressurised cabin with climate-controlled HVAC system
- 20 tonne machinery (Rhino) hook
- Newly designed 30t fall block with handles

*Refer to
www.terex.com/en/company/intellectual-property/franna-patents
for current patent details

TECHNICAL DESCRIPTION

01. Boom	
Maximum boom length	18.4m
Maximum hook height	18m
Boom elevation angle range	-10° / 65°
Articulation	40° R / 40° L
Machinery hook	20 tonne

02. Winch	
Maximum line pull	4.3 tonne
Two speed winch	45m/min / 90m/min
Hook block (7 part)	30 tonne maximum rated capacity

03. Engine & Transmission	
Standard engine	Mercedes OM936
Engine power	210kW
Engine torque	1200Nm
Fuel Type	Diesel
Fuel Tank Capacity	440 litres
Transmission	Allison 6 speed
Transfer case	ZF 2:1 Ratio
DEF Tank Capacity	38 litres
Emissions compliance	Tier 4f/Stage 5

04. Hydraulic System	
Axial piston pump	75cc/rev
Maximum pump flow rate	177 litres/min
Maximum working pressure	260 bar
Hydraulic tank capacity	380 litres

05. Chassis	
Front Axle (Tare / GVM)	11,400 kg / 12,000 kg
Rear Axle (Tare / GVM)	11,880 kg / 12,000 kg
Axle total (Tare / GVM)	23,280kg / 24,000kg
Turning radius	8.3m
Tyre Size	14.00 x 20

06. Brakes & Suspension	
Brake System	Air operated drum brakes with ABS
Suspension	Elliptic springs with hydraulic spring lockouts on front axle

07. Vehicle Performance	
Maximum rated travel speed	80 km/h



DIMENSIONS / AREA OF OPERATION

Side view

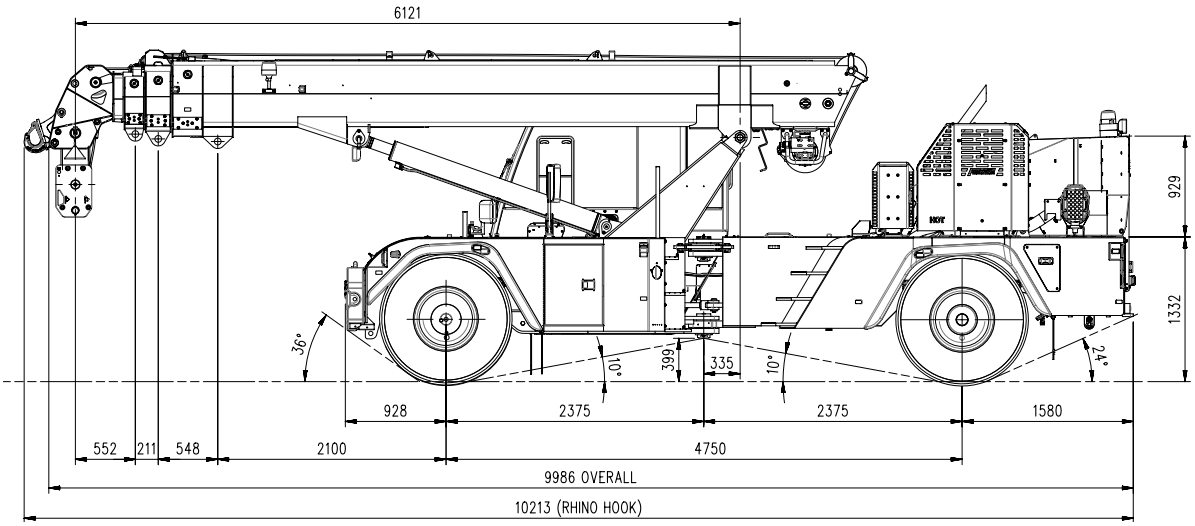

Aerial view

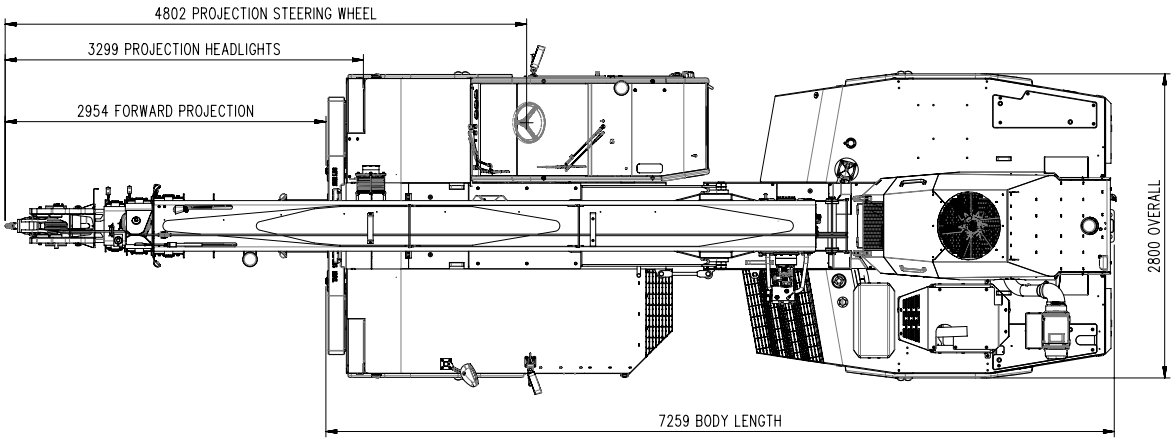

Front View

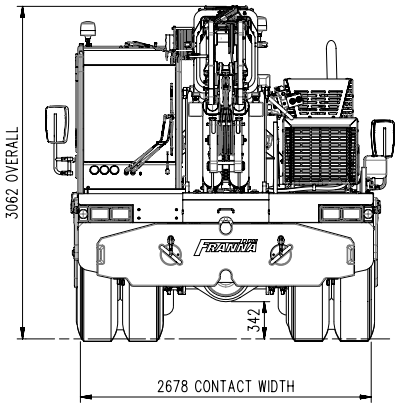

Area of operation

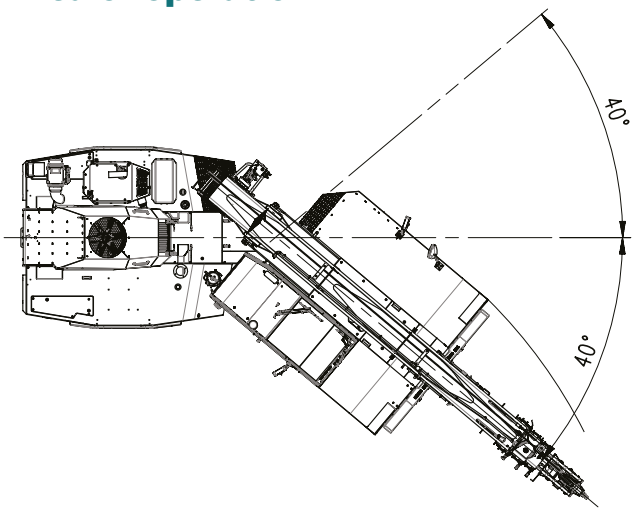

RADIUS LOAD CHART

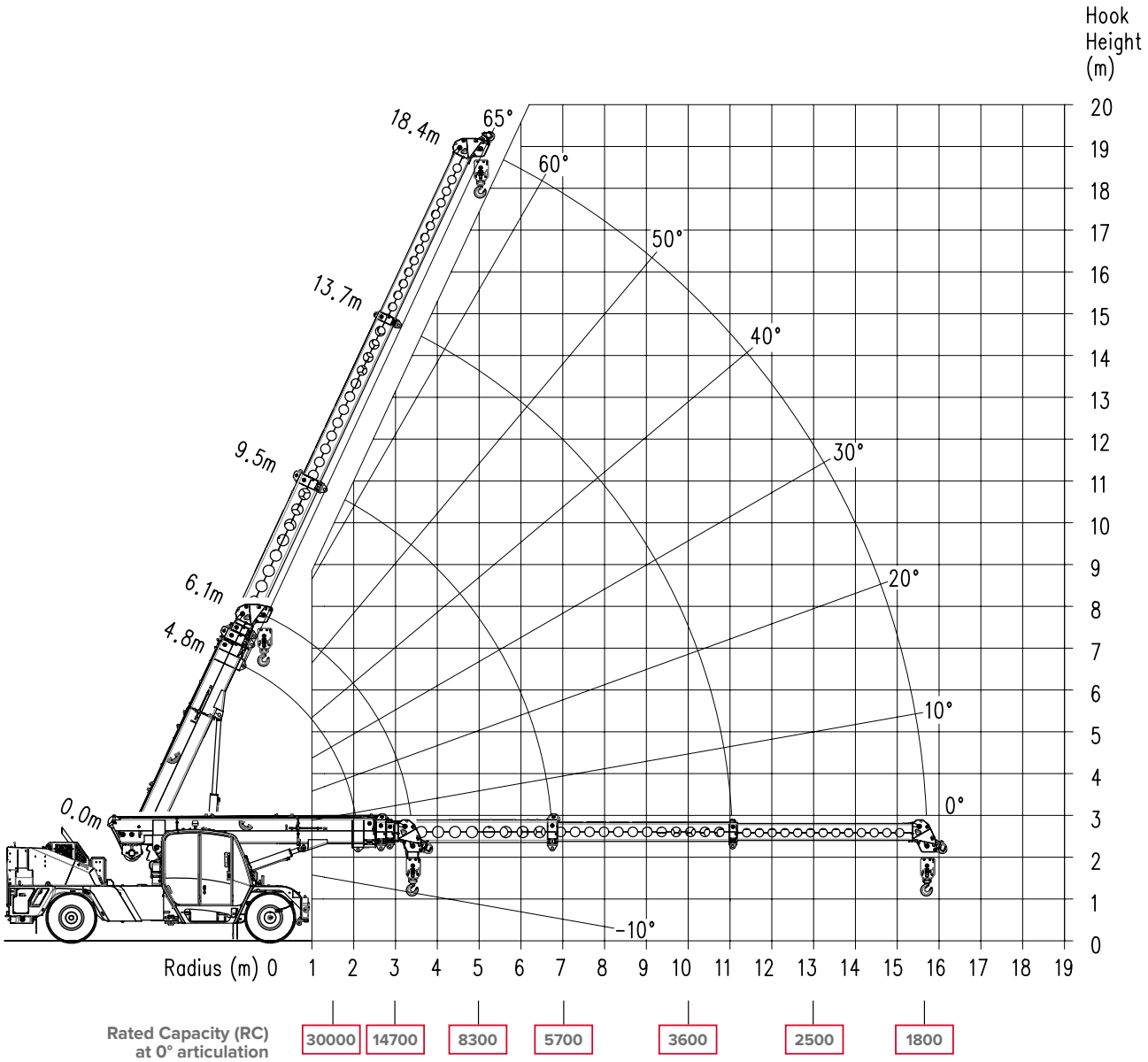

NOTE: Rated Capacity values shown are for the Pick and Carry Chart.

LOAD CHART

RATED CAPACITY CHART PICK AND CARRY (0 - 1.44 km/hr) - FALL BLOCK

Duty: 201 FB

COUNTERWEIGHT: STANDARD
POSITION: REAR OF CRANE
STANDARD: AS 1418.5:2013

Rad	BOOM PIVOT TO HEAD SHEAVES - 3rd BOOM RETRACTED													3rd BOOM EXTENDING				Rad
	6.12	6.50	7.00	7.50	8.00	8.50	9.00	9.50	10.00	11.00	12.00	13.00	14.00	15.00	16.00	17.00	18.42	
1.0	30000	30000	29000	28200	27700													1.0
	30000	30000	29000	28200	27700													
	53	56	58	61	63													
2.0	22800	22800	22800	22800	22700	22700	22500	22000	21600									2.0
	20400	20300	20300	20300	20300	20300	19900	19600	18700									
	40	44	48	52	55	57	59	61	63									
2.5	18000	18000	17900	17900	17900	17900	17900	17900	17900	17900								2.5
	17200	17200	17200	17100	17100	17100	17100	17100	17100	17100								
	16000	16000	16000	16000	16000	15900	15900	15900	15900	15000								
	32	37	43	47	50	53	55	58	60	61								
3.0	14700	14700	14700	14700	14700	14700	14700	14700	14700	14600	14600							3.0
	14100	14100	14100	14100	14000	14000	14000	14000	14000	14000	14000							
	13100	13100	13100	13100	13100	13100	13000	13000	13000	12400	11300							
	22	29	36	41	45	49	51	54	56	60	63							
3.5	12400	12400	12400	12400	12400	12400	12400	12400	12400	12400	12300	12300						3.5
	11800	11800	11800	11800	11800	11800	11800	11800	11800	11800	11800	11800						
	11000	11000	11000	11000	11000	11000	11000	11000	11000	11000	10100	9300						
	(3.5)	19	29	35	40	44	47	50	53	57	60	63						
4.0		11000	10700	10700	10700	10700	10700	10700	10600	10600	10600	10600	10600					4.0
		10500	10200	10200	10200	10200	10200	10200	10200	10100	10100	10100	10100					
		9800	9400	9400	9400	9400	9400	9400	9400	9400	9100	8400	7800					
		(3.9)	18	28	34	39	43	46	49	54	57	60	63					
5.0			9600	8500	8200	8200	8200	8200	8200	8200	8200	8200	8200	8300	8300			5.0
			9200	8100	7800	7800	7800	7800	7800	7800	7800	7800	7800	7900	7900			
			8500	7500	7200	7300	7300	7300	7300	7200	7200	7000	6600	6200	6000			
			(4.4)	(4.9)	17	26	32	37	41	47	51	55	58	61	63			
6.0					7500	6800	6600	6600	6600	6600	6600	6600	6600	6600	6700	6800		6.0
					7200	6400	6300	6300	6300	6300	6300	6300	6300	6300	6400	6500		
					6600	5900	5800	5800	5800	5800	5800	5800	5600	5400	5200	5000		
					(5.4)	(5.9)	17	25	31	39	45	49	53	56	59	61		
7.0							6100	5600	5400	5500	5500	5500	5400	5500	5600	5600	5700	7.0
							5800	5300	5200	5200	5200	5200	5200	5200	5300	5400	5400	
							5300	4800	4700	4800	4800	4800	4700	4700	4500	4400	4200	
							(6.4)	(6.9)	16	29	37	43	48	52	55	57	61	
8.0									5100	4600	4600	4600	4600	4600	4700	4800	4800	8.0
									4800	4300	4300	4300	4300	4400	4500	4500	4600	
									4400	4000	4000	4000	4000	4000	4000	3900	3700	
									(7.4)	15	28	36	42	46	50	53	57	
9.0										4300	3900	3900	3900	4000	4000	4100	4200	9.0
										4100	3700	3700	3700	3700	3800	3900	3900	
										3700	3400	3400	3400	3400	3500	3500	3400	
										(8.4)	15	28	35	41	45	49	53	
10.0											3700	3400	3400	3400	3500	3600	3600	10.0
											3500	3200	3200	3200	3300	3400	3400	
											3100	2900	2900	2900	3000	3100	3000	
											(9.4)	15	27	34	40	44	49	
11.0												3200	2900	3000	3000	3100	3200	11.0
												3000	2700	2800	2900	2900	3000	
												2700	2500	2500	2600	2700	2700	
												(10.4)	14	26	33	39	44	
12.0													2800	2600	2700	2700	2800	12.0
													2600	2400	2500	2600	2600	
													2300	2200	2300	2300	2400	
													(11.4)	14	25	32	40	
13.0														2500	2400	2400	2500	13.0
														2300	2200	2300	2300	
														2100	2000	2000	2100	
														(12.4)	14	25	34	
14.0															2200	2100	2200	14.0
															1900	1800	1900	
															(13.4)	14	28	
15.0																2000	2000	15.0
																1700	1700	
																(14.3)	19	
15.766																	1800	15.766
																	1500	
																	(15.8)	
	12.00	13.00	14.00	15.00	16.00	17.00	18.42											

WINCH RATED CAPACITY

2 FALLS	8700
4 FALLS	17500
6 FALLS	26200
7 FALLS	30000

UNITS:

- ANGLES IN DEGREES
- LENGTHS IN METRES
- LOAD IN KILOGRAMS

KEY:

8200	RC @ ARTIC: 0°	PITCH: -2.3	ROLL: -0.6
7800	RC @ ARTIC: 25°	PITCH: -2.3	ROLL: -0.6
7200	RC @ ARTIC: 40°	PITCH: -2.3	ROLL: -0.6
17	BOOM ANGLE		
(5.9)	RADIUS AT ZERO BOOM ANGLE		

Note: Pitch & Roll angles indicated reference the cranes chassis angles, for other chassis angles refer to Franna Lift Planner.

LOAD CHART

RATED CAPACITY CHART STATIC (0 km/hr) - FALL BLOCK

Duty: 201 FB

COUNTERWEIGHT: STANDARD
POSITION: REAR OF CRANE
STANDARD: AS 1418.5:2013

Rad	BOOM PIVOT TO HEAD SHEAVES - 3rd BOOM RETRACTED													3rd BOOM EXTENDING				Rad
	6.12	6.50	7.00	7.50	8.00	8.50	9.00	9.50	10.00	11.00	12.00	13.00	14.00	15.00	16.00	17.00	18.42	
1.0	30000	30000	29000	28200	27700													1.0
	30000	30000	29000	28200	27700													
	53	56	58	61	63													
2.0	25700	25600	25300	24700	24200	23800	23300	22900	22500									2.0
	22900	22900	22500	22000	21500	21100	20700	20300	20000									
	40	44	48	52	55	57	59	61	63									
2.5	20200	20200	20200	20200	20200	20000	19700	19300	19000	18700								2.5
	19300	19300	19300	19300	19300	19100	18800	18500	18200	17900								
	18000	18000	18000	18000	18000	17700	17400	17100	16900	16600								
	32	37	43	47	50	53	55	58	60	61								
3.0	16600	16600	16600	16600	16500	16500	16500	16500	16400	16000	15600							3.0
	15800	15800	15800	15800	15800	15800	15800	15800	15700	15200	14800							
	14700	14700	14700	14700	14700	14700	14700	14700	14500	13800	12600							
	22	29	36	41	45	49	51	54	56	60	63							
3.5	14000	13900	14000	14000	14000	13900	13900	13900	13900	13900	13700	13400						3.5
	13300	13300	13300	13300	13300	13300	13300	13300	13300	13300	13100	12800						
	12400	12400	12400	12400	12400	12400	12400	12400	12300	12200	11200	10300						
	(3.5)	19	29	35	40	44	47	50	53	57	60	63						
4.0		12400	12000	12000	12000	12000	12000	12000	12000	12000	12000	11900	11700					4.0
		11900	11400	11500	11500	11500	11400	11400	11400	11400	11400	11400	11100					
		11000	10600	10600	10600	10600	10600	10600	10600	10600	10000	9200	8600					
		(3.9)	18	28	34	39	43	46	49	54	57	60	63					
5.0			10800	9500	9300	9300	9300	9300	9300	9300	9200	9200	9200	9300	9400			5.0
			10300	9100	8800	8800	8800	8800	8800	8800	8800	8800	8800	8900	8900			
			9500	8400	8200	8200	8200	8200	8200	8200	8100	7700	7200	6800	6600			
			(4.4)	(4.9)	17	26	32	37	41	47	51	55	58	61	63			
6.0					8500	7600	7400	7400	7400	7400	7400	7400	7400	7500	7600	7600		6.0
					8100	7200	7100	7100	7100	7100	7100	7100	7100	7100	7200	7300		
					7500	6700	6500	6500	6500	6500	6500	6500	6100	5800	5600	5400		
					(5.4)	(5.9)	17	25	31	39	45	49	53	56	59	61		
7.0							6900	6300	6100	6100	6100	6100	6100	6200	6300	6300	6400	7.0
							6500	5900	5800	5800	5800	5800	5800	5900	6000	6000	6100	
							6000	5500	5300	5400	5400	5400	5300	5100	4900	4800	4600	
							(6.4)	(6.9)	16	29	37	43	48	52	55	57	61	
									5700	5200	5200	5200	5200	5200	5300	5400	5500	8.0
									5400	4900	4900	4900	4900	4900	5000	5100	5200	
									5000	4500	4500	4500	4500	4500	4300	4200	4000	
									(7.4)	15	28	36	42	46	50	53	57	
										4800	4400	4400	4400	4500	4500	4600	4700	9.0
										4600	4200	4200	4200	4200	4300	4400	4400	
										4200	3800	3800	3800	3900	3900	3700	3600	
										(8.4)	15	28	35	41	45	49	53	
											4100	3800	3800	3900	3900	4000	4100	10.0
											3900	3600	3600	3600	3700	3800	3900	
											3500	3200	3200	3300	3400	3400	3300	
											(9.4)	15	27	34	40	44	49	
												3600	3300	3400	3400	3500	3600	11.0
												3400	3100	3200	3200	3300	3400	
												3000	2800	2900	2900	3000	3000	
												(10.4)	14	26	33	39	44	
													3100	2900	3000	3100	3200	12.0
													2900	2700	2800	2900	3000	
													2600	2500	2600	2600	2700	
													(11.4)	14	25	32	40	
														2800	2700	2700	2800	13.0
														2600	2500	2600	2600	
														2300	2200	2300	2400	
														(12.4)	14	25	34	
															2500	2400	2500	14.0
															2100	2000	2100	
															(13.4)	14	28	
																2300	2200	15.0
																1900	1900	
																(14.3)	19	
																	2000	15.8
																	1700	
																	(15.8)	
	12.00											13.00	14.00	15.00	16.00	17.00	18.42	

WINCH RATED CAPACITY

2 FALLS	8700
4 FALLS	17500
6 FALLS	26200
7 FALLS	30000

UNITS:

- ANGLES IN DEGREES
- LENGTHS IN METRES
- LOAD IN KILOGRAMS

KEY:

9300	RC @ ARTIC: 0°	PITCH: -2.3	ROLL: -0.6
8800	RC @ ARTIC: 25°	PITCH: -2.3	ROLL: -0.6
8200	RC @ ARTIC: 40°	PITCH: -2.3	ROLL: -0.6
17	BOOM ANGLE		
(5.9)	RADIUS AT ZERO BOOM ANGLE		

Note: Pitch & Roll angles indicated reference the cranes chassis angles, for other chassis angles refer to Franna Lift Planner.

OUR LOCATIONS



Brisbane (Head Office)

Terex Australia Pty Ltd
585 Curtin Avenue East (PO Box 1396)
Eagle Farm QLD 4009, Australia

Tel: +61 7 3868 9600
Fax: +61 7 3268 2489

Services: Manufacturing, Sales, Service, Parts

Sydney

Terex Australia Pty Ltd
114 Hassall Street
Wetherill Park NSW 2164, Australia

Tel: +61 2 8786 4444
Fax: +61 2 8786 4455

Services: Sales, Service, Parts

Melbourne

Terex Australia Pty Ltd
133 Logis Boulevard
Dandenong South VIC 3175, Australia

Tel: +61 3 8794 4170
Fax: +61 3 9551 8143

Services: Sales, Service, Parts

Perth

Terex Australia Pty Ltd
39 Catalano Road
Canning Vale WA 6155, Australia

Tel: +61 8 9232 0000
Fax: +61 8 9232 0051

Services: Sales, Service, Parts

24/7 Support: 1800 837 395 or **EAG.ProductSupport@terex.com**
Email: franna@terex.com

The material in this document is for information only and is subject to change without notice.
Franna® assumes no liability resulting from errors or omissions in this document, or from the use of the information contained herein.
Due to continual product development we reserve the right to change specifications without notice. Product performance figures given in this brochure are for guidance purposes only, this information does not constitute an expressed or implied warranty or guarantee, but shows test examples. These results will vary depending on application. Photographs are for illustrative purposes only; some or all of the machines in the illustrations may be fitted with optional extras. Please check with your Dealer for details on optional extras.
Published and Printed in September 2026.

www.terex.com/franna