TEREX®

TECH TIPS

AERIAL LOAD CHARTS P/N 493585

NO. 20

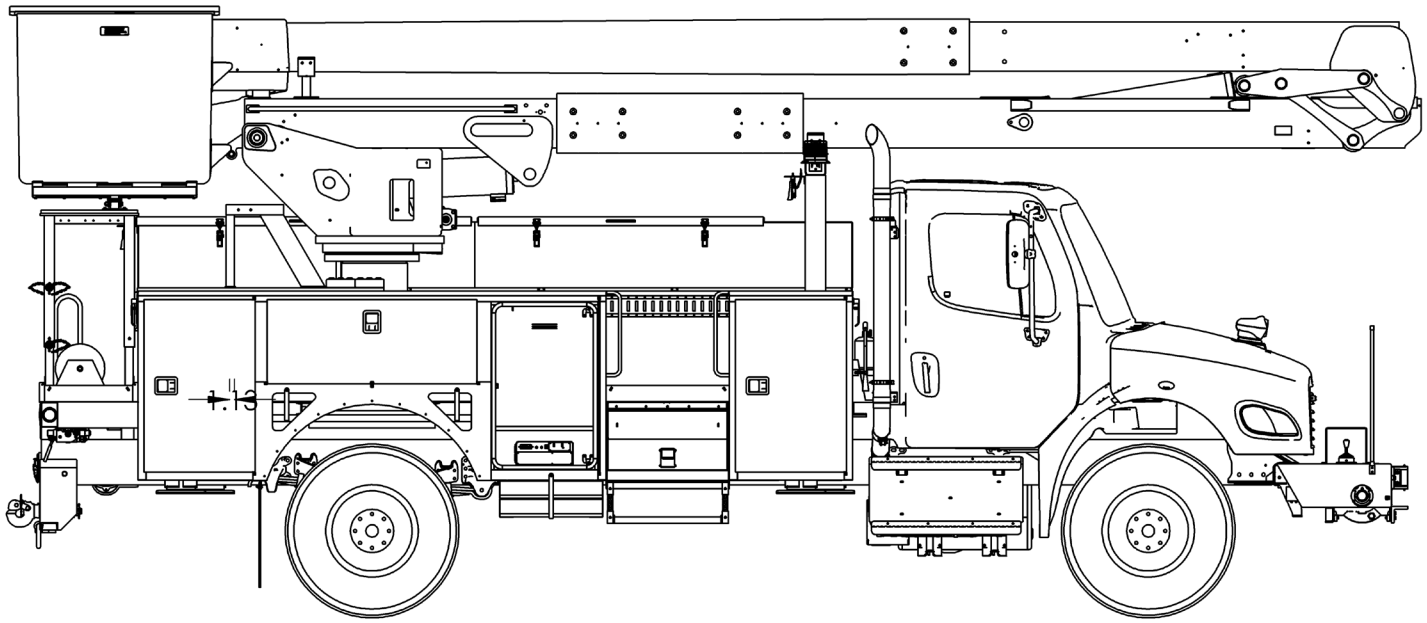

GENERAL KNOWLEDGE
AERIAL LOAD CHARTS

MODEL(S):
AERIAL UNITS USING LOAD CHART 493585

TOOLS NEEDED:
NONE

TEREX UTILITIES TECHNICAL SUPPORT TEAM
PHONE: 1-844-TEREX4U (1-844-837-3948) | EMAIL: UTILITIES.SERVICE@TEREX.COM

DANGER

Failure to obey the instructions and safety rules in the appropriate Operator's Manual and Service Manual for your machine will result in death or serious injury.

Many of the hazards identified in the Operator's Manual are also safety hazards when maintenance and repair procedures are performed.

DO NOT PERFORM MAINTENANCE UNLESS:

√ You are trained and qualified to perform maintenance on this machine.

√ You read, understand and obey:

- manufacturer's instructions and safety rules
- employer's safety rules and worksite regulations
- applicable governmental regulations

√ You have the appropriate tools, lifting equipment and a suitable workshop.

The information contained in this Tech Tip is a supplement to the Service Manual. Consult the appropriate Service Manual of your machine for safety rules and hazards.

TEREX®

TECH TIP 20 | RELEASED 06.05.2025 | VERSION 1.0

©TEREX UTILITIES. ALL RIGHTS RESERVED

CONTENTS

TECH TIP#20

4 | *Transformer weight*
INTRODUCTION
STEP 1

5 | *Determine weight within platform*
STEP 2

6 | *Load Radius*
STEP 3

7 | *Upper Boom Angle*
STEP 4

INTRODUCTION

An operator will move a transformer from the ground and position it on a pole. Using the information in the following steps, determine if the lift plan can be achieved while remaining within the limits of the load chart.

This tech-tip demonstrates how to use a load chart. Always use the unit specific load chart to determine capacities and to plan the path of the load.

STEP 1

The transformer has a known weight of 150 lbs. Performing a dry run, the operator determined the boom angles required to move and place the transformer.

TL50 JIB LIFTING CAPACITIES

UB ANGLE	WINCH CENTER TO LOAD LINE				
	0' TO 2'	2' TO 3'	3' TO 4'	4' TO 5'	OVER 5'
75°	1300	750	650	400	300
65°	800	750	650		
60°	650	625	600		
45°	425	400	375	350	
30°	150	125	100	100	
15°	0				
0°					
-15°					
-30°	150	125	100	100	100
-40°	150	125	100	100	
MAX	1500	750	650	400	400

EQUIPPED AS FOLLOWS:

- SIDE MOUNT BOOM TIP WITH PLATFORM LIFTER
- 500 LB. PLATFORM CAPACITY.
- CAPACITIES ARE IN LB.
- 90% OF THE UNUSED BASKET CAPACITY CAN BE ADDED TO THE JIB, UP TO A LOAD RADIUS OF 3'. NOT TO EXCEED VALUES SHOWN IN THE "MAX" ROW

493585A

Load Radius	1 foot	**Liner**	60 lbs.
Operator	240 lbs.	**Tools**	40 lbs.
Transformer	150 lbs.	**Upper Boom Angle**	20° to 60°

STEP 2

Determine if the load in the platform is within capacity.

Using the load chart, the platform capacity is 500 lbs.

The weight of the Operator + Liner + Tools = 240 + 60 + 40 = 340 lbs.

The total weight is less than the platform capacity.

Load Radius	1 foot	**Liner**	60 lbs.
Operator	240 lbs.	**Tools**	40 lbs.
Transformer	150 lbs.	**Upper Boom Angle**	20° to 60°

TL50 JIB LIFTING CAPACITIES

WINCH CENTER TO LOAD LINE

UB ANGLE	0' TO 2'	2' TO 3'	3' TO 4'	4' TO 5'	OVER 5'
75°	1300	750	650	400	300
65°	800	750	650		
60°	650	625	600		
45°	425	400	375	350	
30°	150	125	100	100	
15°	0				
0°					
-15°					
-30°	150	125	100	100	100
-40°	150	125	100	100	
MAX	1500	750	650	400	400

EQUIPPED AS FOLLOWS:

- SIDE MOUNT BOOM TIP WITH PLATFORM LIFTER
- 500 LB. PLATFORM CAPACITY.
- CAPACITIES ARE IN LB.
- 90% OF THE UNUSED BASKET CAPACITY CAN BE ADDED TO THE JIB, UP TO A LOAD RADIUS OF 3'. NOT TO EXCEED VALUES SHOWN IN THE "MAX" ROW

493585A

STEP 3

According to the table, the load radius is 1 foot. The jib lifting capacities will be taken from the first column in the load chart (0’ TO 2’).

Load Radius	1 foot	Transformer	150 lbs.
Upper Boom Angle	20° to 60°		

TL50 JIB LIFTING CAPACITIES

WINCH CENTER TO LOAD LINE

UB ANGLE	0' TO 2'	2' TO 3'	3' TO 4'	4' TO 5'	OVER 5'
75°	1300	750	650	400	300
65°	800	750	650		
60°	650	625	600		
45°	425	400	375	350	
30°	150	125	100	100	
15°		0			
0°					
-15°					
-30°	150	125	100	100	100
-40°	150	125	100	100	
MAX	1500	750	650	400	400

EQUIPPED AS FOLLOWS:

- SIDE MOUNT BOOM TIP WITH PLATFORM LIFTER
- 500 LB. PLATFORM CAPACITY.
- CAPACITIES ARE IN LB.
- 90% OF THE UNUSED BASKET CAPACITY CAN BE ADDED TO THE JIB, UP TO A LOAD RADIUS OF 3’. NOT TO EXCEED VALUES SHOWN IN THE “MAX” ROW

493585A

STEP 4

During the dry run, it is determined that the upper boom range is 20 to 60 degrees. Looking at the load chart, the minimum jib capacity in this range is 0 lbs.

The load chart indicates that 90% of unused platform capacity can be added to the load chart for a load radius up to 3' as long as the total does not exceed the indicated MAX. As determined in Step 2, there is 160 lbs. of unused platform capacity.

160 lbs. x 90% = 144 lbs.

Even adding in the unused platform capacity, there isn't enough capacity to perform the lift with the upper boom at 20 degrees.

Load Radius	1 foot	**Transformer**	150 lbs.
Upper Boom Angle	20° to 60°		

TL50 JIB LIFTING CAPACITIES

WINCH CENTER TO LOAD LINE

UB ANGLE	0' TO 2'	2' TO 3'	3' TO 4'	4' TO 5'	OVER 5'
75°	1300	750	650	400	300
65°	800	750	650		
60°	650	625	600		
45°	425	400	375	350	
30°	150	125	100	100	
15°	0				
0°					
-15°					
-30°	150	125	100	100	100
-40°	150	125	100	100	
MAX	1500	750	650	400	400

EQUIPPED AS FOLLOWS:

- SIDE MOUNT BOOM TIP WITH PLATFORM LIFTER
- 500 LB. PLATFORM CAPACITY.
- CAPACITIES ARE IN LB.
- 90% OF THE UNUSED BASKET CAPACITY CAN BE ADDED TO THE JIB, UP TO A LOAD RADIUS OF 3'. NOT TO EXCEED VALUES SHOWN IN THE "MAX" ROW

493585A

TEREX®

FOR FURTHER ASSISTANCE,
CONTACT THE TEREX UTILITIES TECHNICAL SUPPORT TEAM
PHONE: 1-844-TEREX4U (1-844-837-3948) | EMAIL: UTILITIES.SERVICE@TEREX.COM