TEREX®

TECH TIPS

AERIAL LOAD CHARTS P/N 613215

NO. 219

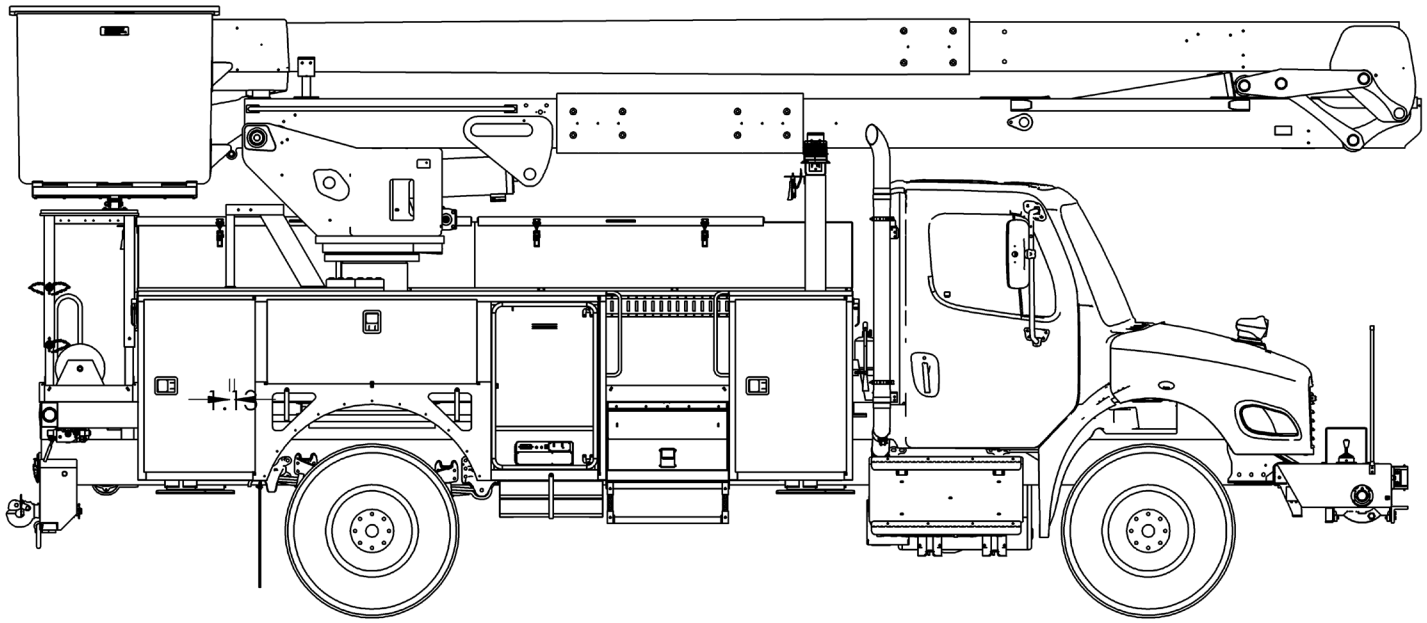

GENERAL KNOWLEDGE
AERIAL LOAD CHARTS

MODEL(S):
AERIAL UNITS USING LOAD CHART 613215

TOOLS NEEDED:
NONE

TEREX UTILITIES TECHNICAL SUPPORT TEAM
PHONE: 1-844-TEREX4U (1-844-837-3948) | EMAIL: UTILITIES.SERVICE@TEREX.COM

DANGER

Failure to obey the instructions and safety rules in the appropriate Operator's Manual and Service Manual for your machine will result in death or serious injury.

Many of the hazards identified in the Operator's Manual are also safety hazards when maintenance and repair procedures are performed.

DO NOT PERFORM MAINTENANCE UNLESS:

√ You are trained and qualified to perform maintenance on this machine.

√ You read, understand and obey:

- manufacturer's instructions and safety rules
- employer's safety rules and worksite regulations
- applicable governmental regulations

√ You have the appropriate tools, lifting equipment and a suitable workshop.

The information contained in this Tech Tip is a supplement to the Service Manual. Consult the appropriate Service Manual of your machine for safety rules and hazards.

TEREX®

TECH TIP 219 | RELEASED 11.7.2024 | VERSION 1.0

©TEREX UTILITIES. ALL RIGHTS RESERVED

CONTENTS

TECH TIP#219

4 INTRODUCTION
STEP 1

5 | *Determine weight within platform*
STEP 2

6 | *Lower Boom Range*
STEP 3

7 | *Load Radius*
STEP 4

8 | *Jib Capacity*
STEP 5

INTRODUCTION

An operator will move a transformer from the ground and position it on a pole. Using the information in the following steps, determine the maximum jib capacity for the lift plan.

This tech-tip demonstrates how to use a load chart. Always use the unit specific load chart to determine capacities and to plan the path of the load.

STEP 1

Using the information provided in the table, determine the maximum jib capacity.

TL60 JIB LIFTING CAPACITIES
LOWER BOOM MUST BE ABOVE RED ZONE

UB ANGLE	BASKET SHAFT TO WINCH LINE 0' TO 2'	2' TO 3'	OVER 3'
85°	1000	550	350
75°		1000	750
70°			900
45°	750	750	700
30°	500	500	450
15°	250	250	250
0°	150	150	150
-15°	200	200	200
-35°	200	200	200
MAX	1000	1000	1000

EQUIPPED AS FOLLOWS:

- END MOUNT BOOM TIP WITH COBRA JIB
- 600 LB. PLATFORM CAPACITY.
- CAPACITIES ARE IN LB.
- ADD 100 LBS TO JIB CAPACITY IF NO PLATFORM LIFTER. NOT TO EXCEED MAX.

613215A

Load Radius	1 foot	**Liner**	50 lbs.
Operators	450 lbs	**Tools**	85 lbs.
Upper Boom Angle	0 to 50 degrees	**Lower Boom Angle**	Above Red Zone

STEP 2

Determine if the load in the platform is within capacity. Using the load chart, the platform capacity is 600 lbs. The weight of the Operator + Liner + Tools = 450 + 50 + 85 = 585 lbs. The total weight is within the platform capacity.

Load Radius	1 foot	**Liner**	50 lbs.
Operators	450 lbs	**Tools**	85 lbs.
Upper Boom Angle	0 to 50 degrees	**Lower Boom Angle**	Above Red Zone

TL60 JIB LIFTING CAPACITIES

LOWER BOOM MUST BE ABOVE RED ZONE

BASKET SHAFT TO WINCH LINE

UB ANGLE	0' TO 2'	2' TO 3'	OVER 3'
85°	1000	550	350
75°		1000	750
70°			900
45°	750	750	700
30°	500	500	450
15°	250	250	250
0°	150	150	150
-15°	200	200	200
-35°	200	200	200
MAX	1000	1000	1000

EQUIPPED AS FOLLOWS:

- END MOUNT BOOM TIP WITH COBRA JIB
- 600 LB. PLATFORM CAPACITY.
- CAPACITIES ARE IN LB.
- ADD 100 LBS TO JIB CAPACITY IF NO PLATFORM LIFTER. NOT TO EXCEED MAX.

613215A

STEP 3

The lower boom is above the red zone, there is no effect on the load chart.

Load Radius	1 foot		
Upper Boom Angle	0 to 50 degrees	**Lower Boom Angle**	Above Red Zone

TL60 JIB LIFTING CAPACITIES

LOWER BOOM MUST BE ABOVE RED ZONE

BASKET SHAFT TO WINCH LINE

UB ANGLE	0' TO 2'	2' TO 3'	OVER 3'
85°	1000	550	350
75°		1000	750
70°			900
45°	750	750	700
30°	500	500	450
15°	250	250	250
0°	150	150	150
-15°	200	200	200
-35°	200	200	200
MAX	1000	1000	1000

EQUIPPED AS FOLLOWS:

- END MOUNT BOOM TIP WITH COBRA JIB
- 600 LB. PLATFORM CAPACITY.
- CAPACITIES ARE IN LB.
- ADD 100 LBS TO JIB CAPACITY IF NO PLATFORM LIFTER. NOT TO EXCEED MAX.

613215A

FIGURE 3

STEP 4

The load radius is 1 foot. Based on this load radius, we will be using the 1st column in the loadchart for a radius of 0’ to 2’.

Load Radius	1 foot	Upper Boom Angle	0 to 50 degrees

TL60 JIB LIFTING CAPACITIES

LOWER BOOM MUST BE ABOVE RED ZONE

BASKET SHAFT TO WINCH LINE

UB ANGLE	0' TO 2'	2' TO 3'	OVER 3'
85°	1000	550	350
75°		1000	750
70°			900
45°	750	750	700
30°	500	500	450
15°	250	250	250
0°	150	150	150
-15°	200	200	200
-35°	200	200	200
MAX	1000	1000	1000

EQUIPPED AS FOLLOWS:

- END MOUNT BOOM TIP WITH COBRA JIB
- 600 LB. PLATFORM CAPACITY.
- CAPACITIES ARE IN LB.
- ADD 100 LBS TO JIB CAPACITY IF NO PLATFORM LIFTER. NOT TO EXCEED MAX.

613215A

FIGURE 4

STEP 5

Using the range of upper boom angles, the lowest capacity throughout the entire range must be used. The jib capacity in this situation is 150 lbs.

Load Radius	1 foot	Upper Boom Angle	0 to 50 degrees

TL60 JIB LIFTING CAPACITIES

LOWER BOOM MUST BE ABOVE RED ZONE

BASKET SHAFT TO WINCH LINE

UB ANGLE	0' TO 2'	2' TO 3'	OVER 3'
85°	1000	550	350
75°		1000	750
70°			900
45°	750	750	700
30°	500	500	450
15°	250	250	250
0°	150	150	150
-15°	200	200	200
-35°	200	200	200
MAX	1000	1000	1000

EQUIPPED AS FOLLOWS:

- END MOUNT BOOM TIP WITH COBRA JIB
- 600 LB. PLATFORM CAPACITY.
- CAPACITIES ARE IN LB.
- ADD 100 LBS TO JIB CAPACITY IF NO PLATFORM LIFTER. NOT TO EXCEED MAX.

613215A

FIGURE 5

TEREX®

FOR FURTHER ASSISTANCE,
CONTACT THE TEREX UTILITIES TECHNICAL SUPPORT TEAM
PHONE: 1-844-TEREX4U (1-844-837-3948) | EMAIL: UTILITIES.SERVICE@TEREX.COM